Check Sheet Trial Ventilator Plate

Process : RALC & Robot KUKA | Art. : AZ62.03V | Setup Speed : 120 | Released:
Program : D711_H120_AISI | Material : BLV150 | Setup Feed : 70 | 16-Aug-23

Observation Inside Diameter Fan Nozzle (yellow marking)

Dimensional check	Point	Sample 1	Sample 2	Sample 3	Sample 4	Sample 5	Sample 6	Sample 7	Sample 8	Sample 9	Sample 10	Sample 11	Sample 12
A	A1	710.68	710.51	710.60	710.01	710.82	710.73	710.55	710.53	710.78	710.04	710.81	710.03
	A2	710.03	710.70	710.87	710.54	710.02	710.04	710.92	711.04	710.53	710.04	710.03	710.03
	A3	710.53	710.55	710.02	710.02	710.58	710.03	710.04	710.64	710.76	710.60	710.02	710.56
	A4	710.74	710.90	710.03	710.04	710.03	710.86	710.62	710.69	710.99	710.95	710.64	710.03
Std : 711 ±1.5	709.50 / 712.50	710.49	710.67	710.38	710.15	710.36	710.41	710.53	710.73	710.77	710.41	710.38	710.16

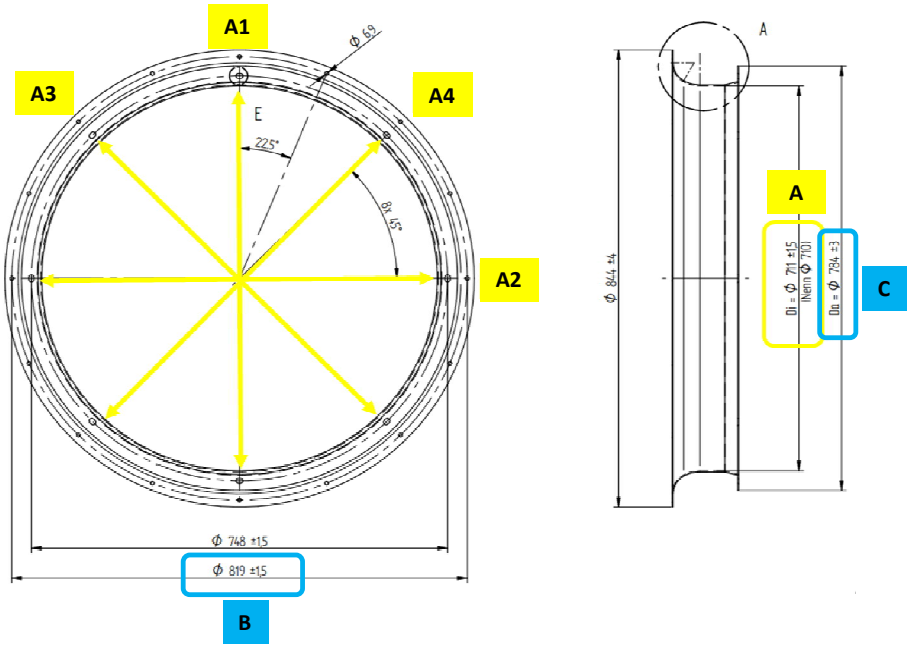

Other dimensional check (blue marking)

Dimensional check	Point	Sample 1	Sample 2	Sample 3	Sample 4	Sample 5	Sample 6	Sample 7	Judgement
B	B1	818	818	819	818	818	818	818	**OK**
	B2	818	818	819	818	818	818	818	
	B3	818	817	818	818	818	818	818	
	B4	818	817	818	818	818	818	818	
Std : 819 ±1.5	817.5 / 820.5	818.00	817.50	818.50	818.00	818.00	818.00	818.00	

Dimensional check	Point	Sample 1	Sample 2	Sample 3	Sample 4	Sample 5	Sample 6	Sample 7	Judgement
C	C1	784	784	785	784	784	785	784	**OK**
	C2	784	785	785	784	785	785	784	
	C3	785	785	784	784	785	784	785	
	C4	785	785	785	785	784	785	784	
Std : 784 ±3	781 / 787	784.50	784.75	784.75	784.25	784.50	784.75	784.25	

Prepared :

Checked :

Approved :